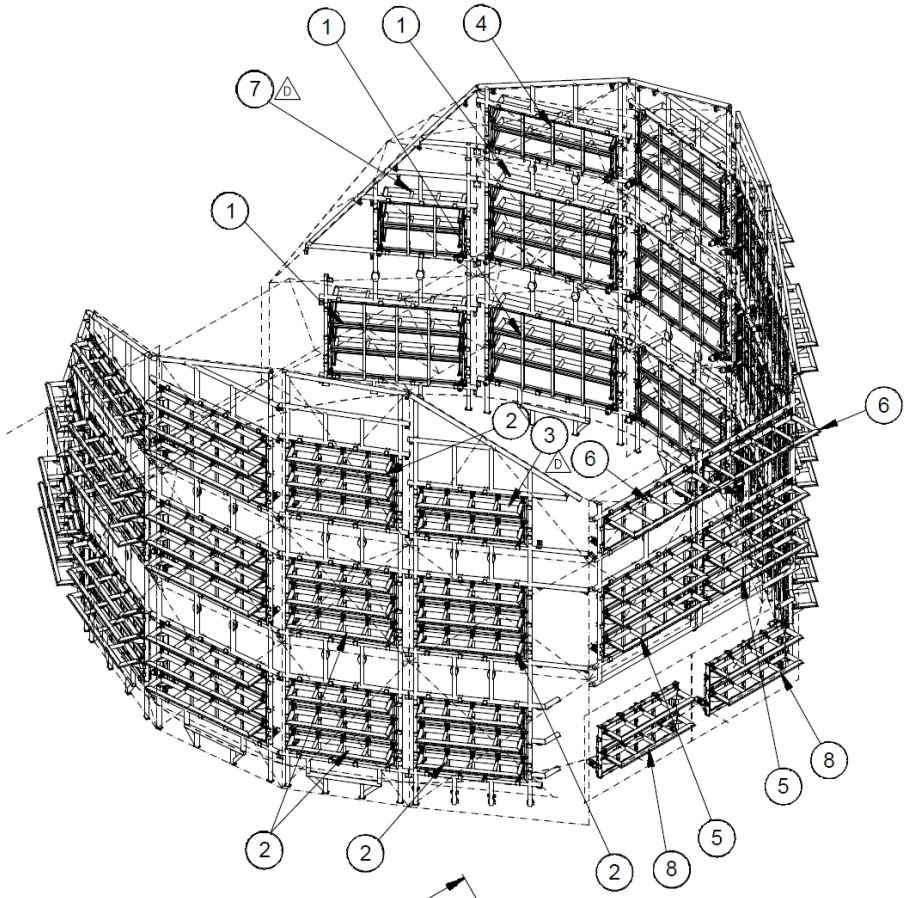

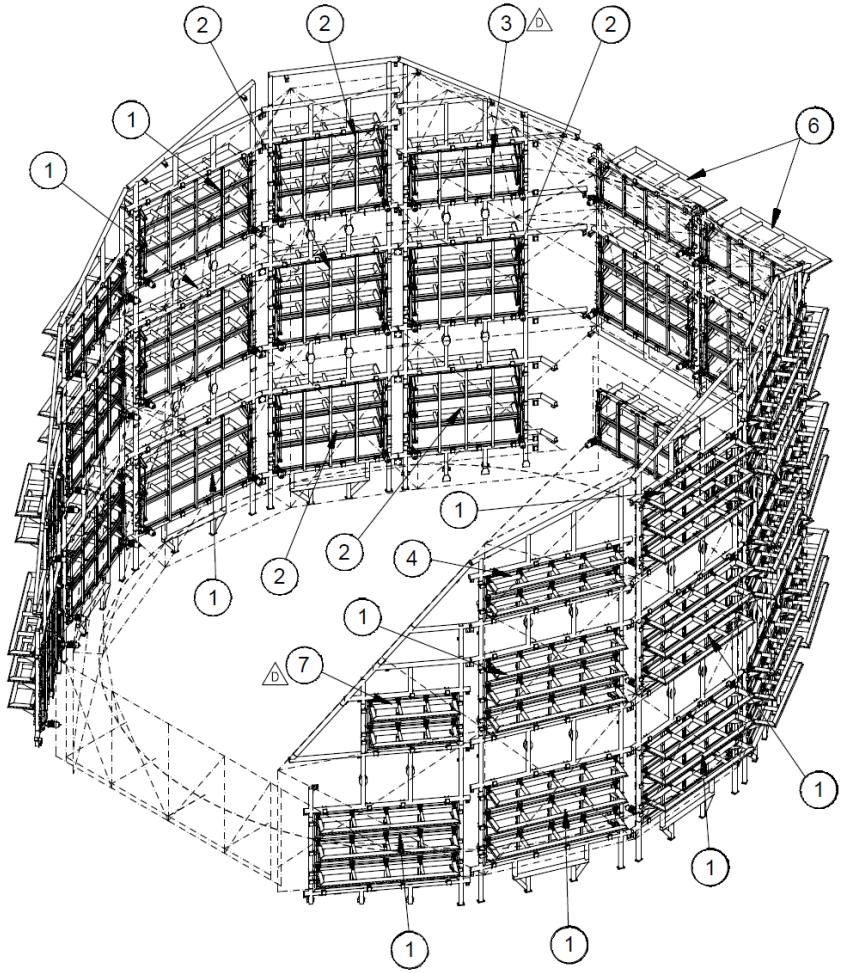

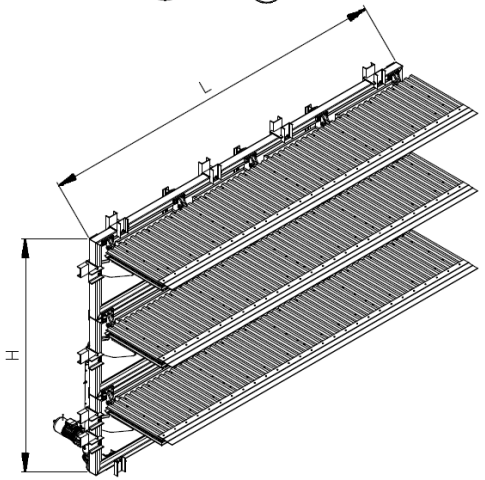

LOUVER NO.	LOUVER ASSEMBLY SURFACE AREA
1	13.00 M^2
2	9.87 M^2
3	6.59 M^2
4	9.03 M^2
5	11.61 M^2
6	7.21 M^2
7	5.04 M^2
8	2.97 M^2

Total n°34 Louvers

Item	Code	Description - Dim. L x H	Q.ty	Actuator Typ.	Unit Mass (Kg)	Total Mass (Kg)
1	45-11-00-00	Louver 1 - 6030 X 3960 - n°3 module	12	ATL63-950	3594	43128
2	45-12-00-00	Louver 2 - 4830 X 3960 - n°3 module	10	ATL63-950	2900	29000
3	45-13-00-00	Louver 3 - 4830 X 2640 - n°2 module	2	ATL63-950	2130	4260
4	45-14-00-00	Louver 4 - 6030 X 2260 - n°2 module	2	ATL63-800	2147	4294
5	45-15-00-00	Louver 5 - 5500 X 3960 - n°3 module	2	ATL63-950	3061	6122
6	45-16-00-00	Louver 6 - 5500 X 2000 - n°1 module	2	ATL63-800	1505	3010
7	45-17-00-00	Louver 7 - 3870 X 2640 - n°2 module	2	ATL63-950	1863	3726
8	45-18-00-00	Louver 8 - 4750 X 2640 - n°2 module	2	ATL63-950	1987	3974

EIE GROUP

EUROPEAN INDUSTRIAL ENGINEERING s.r.l.
via Torino 161A - Mestre
Venezia - 30172 - ITALY
tel. +39 041 5317906 - www.eie.it

LSST Large Synoptic Survey Telescope

E	Weight Update	MFE	13.12.2018	
D		MFE	20.11.2018	
C	General Review	MFE	14.08.2018	
B	General Review	AS	23.05.18	
A	First issue	AS	08.12.18	
Rev	Modification	Name	Date	

Material: | Surface: | Tolerances according to: ISO 2768/1-m ISO 2768/2-k | Roughness:

Mass: - | Scale: 1:100

	Date	Name
Designed	01/08/2018	AS
Checked	02/10/2018	SOL
Approved	05/10/2018	GPM

Project-Prod. item.instrument:

Naming:
LSST DOME
MECHANISMS
LOUVERS/LIGHT BAFFLE
LOUVERS

Drawing N. EIE-DWG-45-10-00-00 | Sheet 1/2

3D Filename: EIE-DWG-45100000E_Sheet 1-2

Drawing size: A1

ALL RIGHTS BELONGING TO EIE GROUP SR
NO COPIES, REPRODUCTION OR DISSEMINATION ARE PERMITTED.

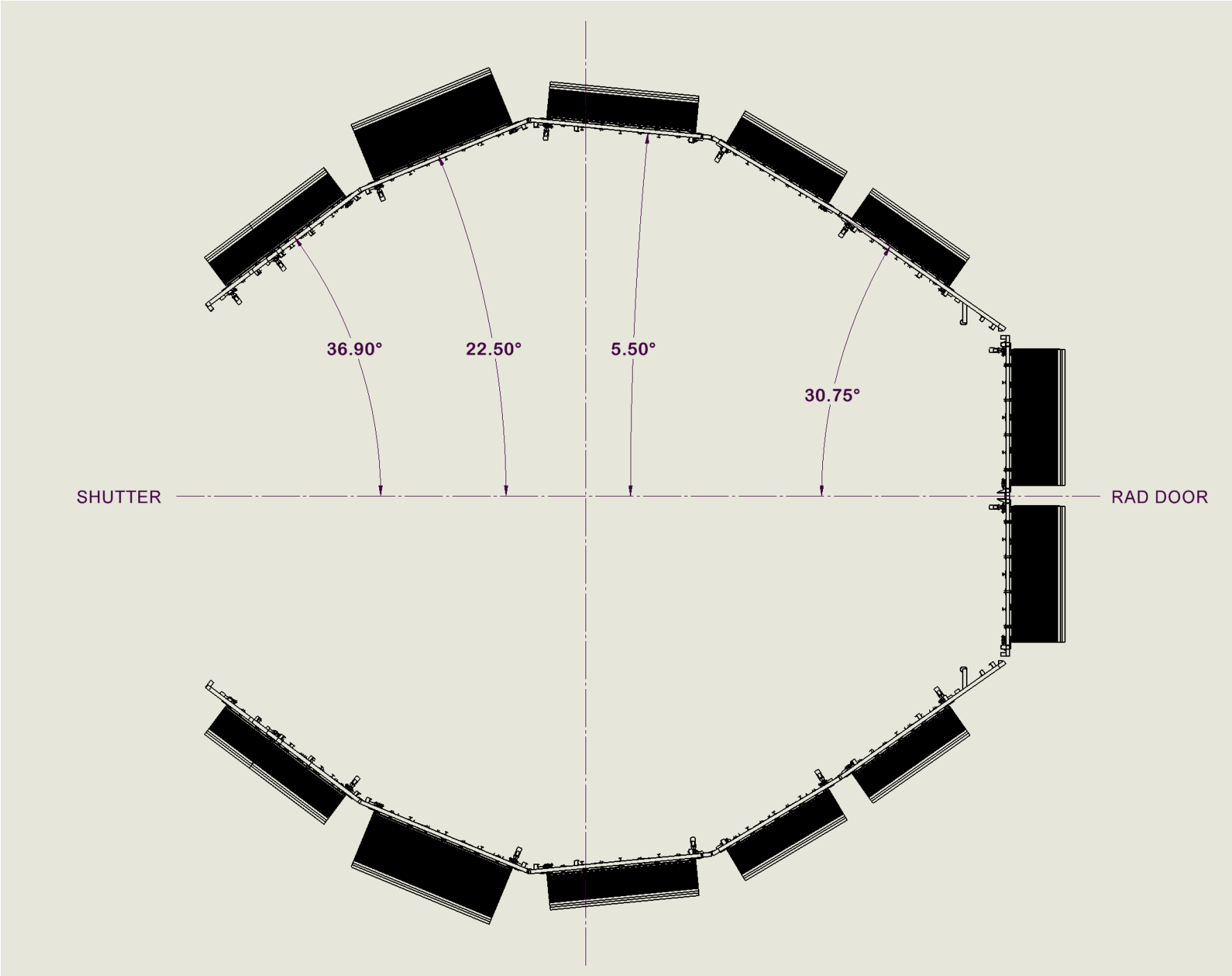
36.90°
22.50°
5.50°
30.75°
SHUTTER
RAD DOOR